REV.	ECR/N NO.		DATE

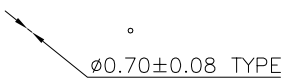

				DRAWN:
MODEL NO:				CHECKED:
UNIT:	SCALE:	REVISION:	SHEET	
				DATE:
				DWG NO:

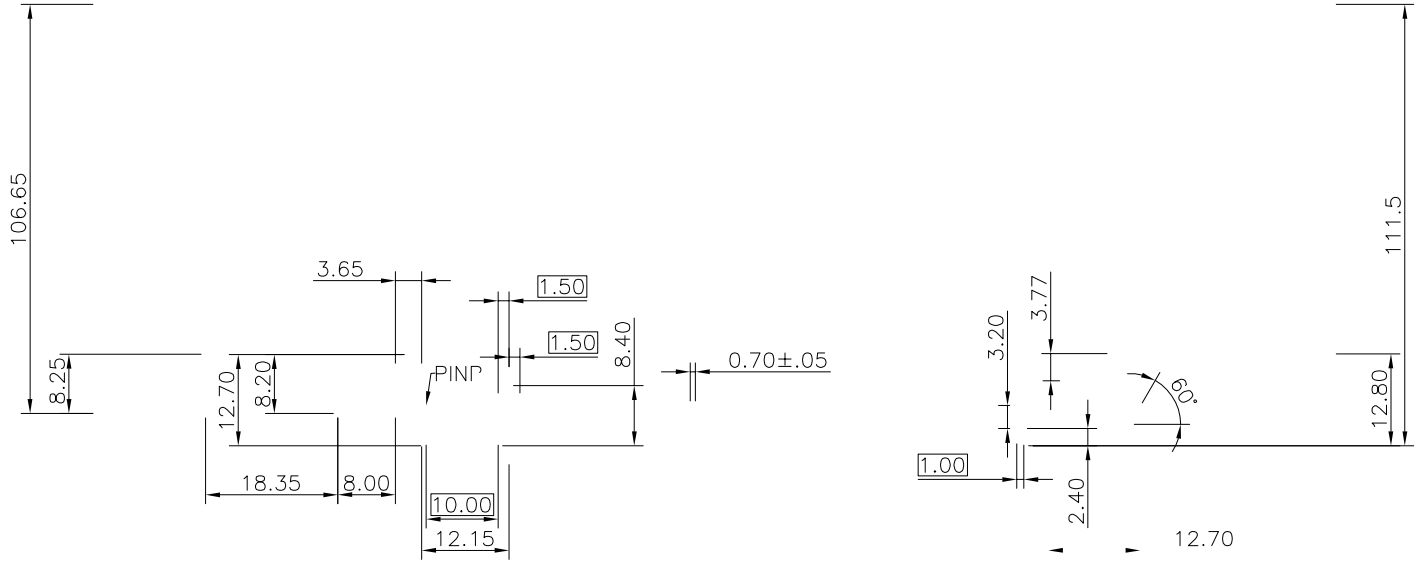
106.65
3.65
1.50
1.50
8.40
0.70±.05
PIN1
8.25
12.70
8.20
18.35
8.00
10.00
12.15
111.5
3.77
3.20
60°
12.80
1.00
2.40
12.70

1·

C



1:1

3/3

CUS-WLPC-1

C